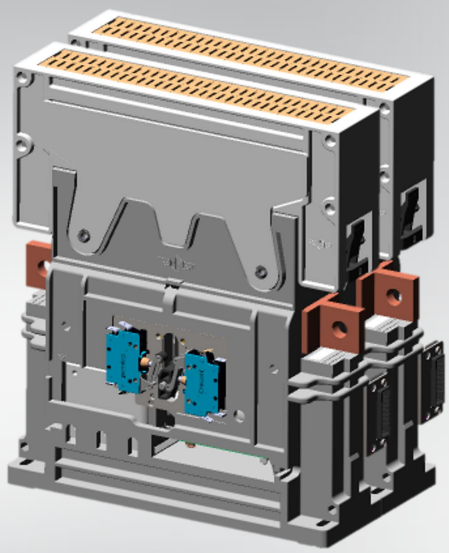

SWITCHES

STANDARD FAMILY CODE
LTXS 900 2NO 1kV

Family Type	LTXS 900
Number / Type of Poles	2 / NO
Mounting Position	Horizontal - Vertical[1]
Control Voltage Rating Uc (DC) [V]	24 - 36 - 48 - 72 - 110[1]
Auxiliary Contact Blocks	2 x (1 NO + 1 NC)
Block Type	PBX
Arc-chute Material	Ceramic
Main Contacts Tips Material	S6
Arcing Contacts Tips Material	-
Electric Diagram	SC27599
Layout Drawing	D53628

[1] To be specified in order phase.

MICROELETTRICA

Description

Contactor with single interruption in air, electromagnetic control by booster power save system. Single state functioning. Reference standard IEC 60077, IEC 60947 and IEC 61992.
Aux contacts available in all feasable position (a0, b0 and a1, b1).

Insulation Characteristics		
Rated Operational Voltage (AC / DC)	[V]	900
Max Operational Voltage (AC / DC)	[V]	1000
Rated Insulation Voltage OV4/PD3A	[V]	3700
Rated Insulation Voltage OV3/PD3	[V]	4800
Rated Impulse Voltage	[kV]	30
Rated Power Frequency Withstand Voltage (50 Hz for 60 s)		
Between HV to LV Circuit + Earth	[V]	11600
Between Open Contacts	[V]	9200
Between Each Pole (if more than 1)	[V]	11600
Between LV Circuit and Earth	[V]	1500
Minimum Clearance Distance between Open Contacts	[mm]	65
Minimum Clearance Distance between Power Circuit to Earth	[mm]	40
Minimum Creepage Distance between Power Circuit to Earth	[mm]	80
Comparative Tracking Index (CTI) (IEC 60112)	[V]	600
Electrical Characteristics of single pole		
Conventional Free Air Thermal Current at 40 °C[2]	[A]	1050
Conventional Free Air Thermal Current at 75 °C[2]	[A]	900
DC - Rated Operational Current (τ = 15 ms)		
900 V	[A]	1100
DC - Maximum Breaking Capacity (τ = 15 ms)		
900 V	[A]	2000
AC - Maximum Breaking Capacity ($\cos\varphi$ = 0,8; 50 Hz)		
900 V	[A]	2500
Component Category / Operational Frequency Class		A2 / C2
Rated Short Time Withstand Current	[kA]	12/10 (for 50/100 ms)
Critical Current Range	[A]	None[3]
Fault Making Capacity	[kA]	12
Blow Out Circuit Type		Indirect Coil with permanent magnet

[2] Device cabled according IEC60947
[3] Tested according to IEC60077:2017
[4] Other mounting positions not allowed, reduced distances should be approved by Microelettrica

Minimum clearances [mm] from:				
Rated Operational Voltage		X	Y	Z
900 V	Metal Parts	50	100	30
	Plastic Parts	30	50	20

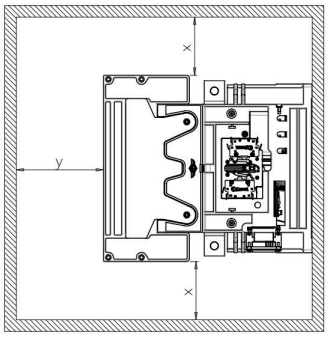

VERTICAL MOUNTING [4]

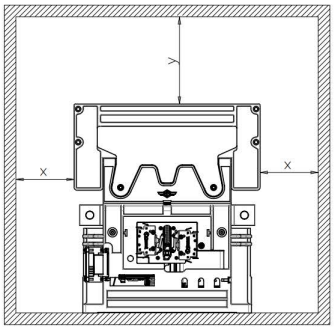

HORIZONTAL MOUNTING [4]

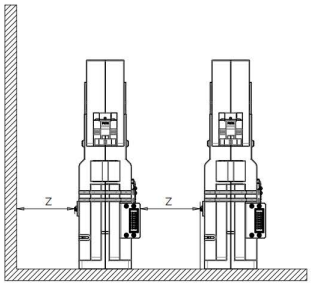

Mechanical Characteristics		
Mechanical Endurance	[cycles]	5×10^5
Shock and Vibrations (IEC 61373)		Cat.1 - Class B
Weight	[kg]	20
Control Circuit		
Control Voltage Range	[V]	0.7Uc ÷ 1.25Uc
Power Consumption (Uc and T = 20 °C) at Pick Up - when Holding	[W]	315 - 20
Mechanical Operation Time (Uc and T = 20 °C) when Closing - Opening	[ms]	300 - 40
Time Constant (L/R) at Pick Up - when Holding	[ms]	100 - 100
Electrical Connections		AMP 178803-7 16 PINS
Auxiliary Contact		
Rated Operational Voltage (AC / DC)	[V]	250
Conventional Free Air Thermal Current at 40 °C	[A]	10
Tips Material		Silver Alloy (Optional: Golden Plated)
Minimum Let-through Current at 24 - 72 - 110 VDC[5]	[mA]	20(10) - 15(7.5) - 10(5)[5]
Electrical Connections		AMP 178803-7 16 PINS
Environmental Conditions		
Stock Temperature Range	[°C]	-50 ÷ +85
Operational Temperature Range up to 1000m	[°C]	Tx (-40 ÷ +75)[6]
Operational Temperature Range up to 2000m	[°C]	T2 (-40 ÷ +65)[6]
Max Altitude without Performance Derating	[m]	2000
Humidity	[m]	10 ÷ 95% RH [7]

[5] Reference Standard IEC 60947-5-4. Tested in a DRY and CLEAN condition with an LR load. The values with golden plated tips are indicated between brackets. For different working conditions, please contact Microelettrica

[6] According to IEC 50125-1

[7] According to IEC 92498-1

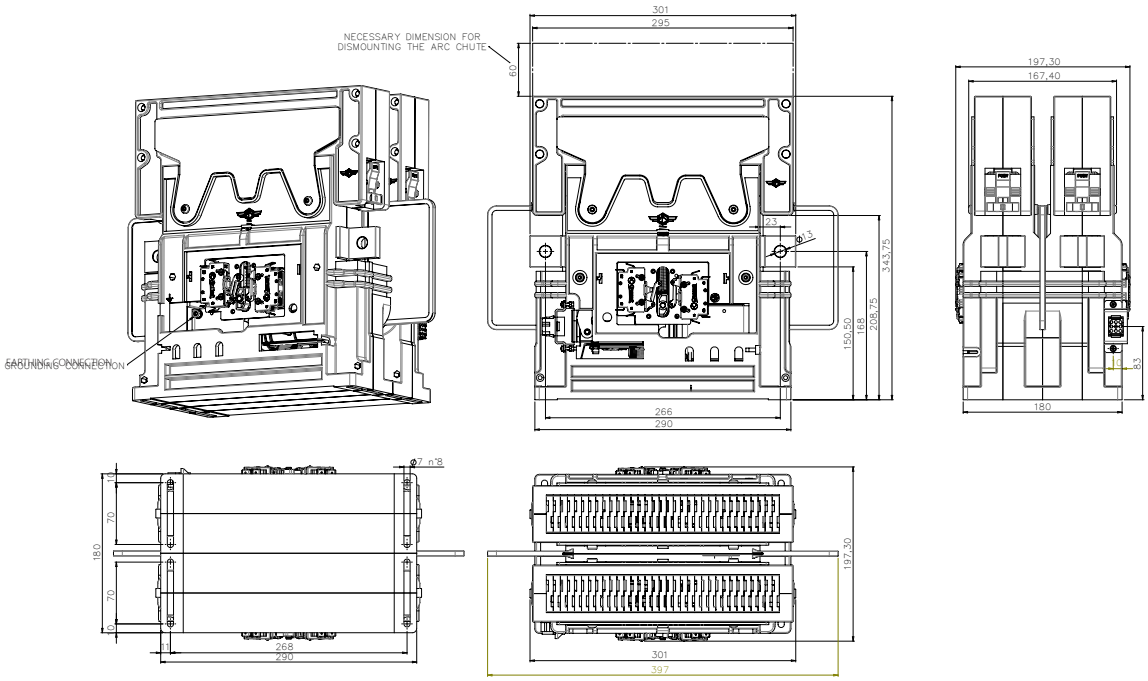

The technical specifications reported are not binding and they should be agreed in the contract.

For further technical information on our products visit www.microelettrica.com

Microelettrica Scientifica S.p.A.

20090 Buccinasco (MI) , Via Lucania 2, Italy
Tel.: +39 02 575731
E-mail: info@microelettrica.com
www.microelettrica.com

KNORR-BREMSE
SELECTRON
NEW YORK AIR BRAKE
KIEPE ELECTRIC
IFE
EVAC
MERAK
ZELISKO
MICROELETTRICA
RAILSERVICES

This publication may be subject to alteration without prior notice. Therefore, a printed copy of this document may not be the late st revision. Please contact your local representative for the latest update. The trademarks K Microelettrica, Knorr and Knorr-Bremse as well as the figurative mark "K" are registered. Copyright © Knorr-Bremse AG and Microelettrica Scientifica S.p.A. - all rights reserv ed, including industrial property rights application. Knorr-Bremse AG and Microelettrica Scientifica S.p.A. retain any power of dispo sal, such as for copying and transferring

LTXS9002NO1KV_R05_11/2022_AM