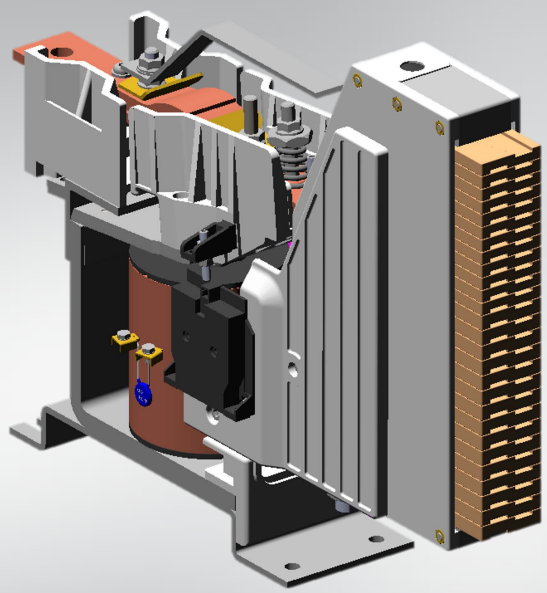

SWITCHES

STANDARD FAMILY CODE
LTHS08001*A04

Family Type	LTHS 800
Number / Type of Poles	1 / NO
Mounting Position	Horizontal - Vertical[1]
Control Voltage Rating Uc (DC) [V]	24 - 36 - 48 - 72 - 110[1]
Auxiliary Contact Blocks	2 x (1 NO + 1 NC)
Block Type	SL
Arc-chute Material	Ceramic
Main Contacts Tips Material	S6
Arcing Contacts Tips Material	S4
Electric Diagram	-
Layout Drawing	D48539

[1] To be specified in order phase.

MICROELETTRICA

Description

Contactor with single interruption in air, electromagnetic control by full power coil. Single state functioning. Reference Standards IEC 60077, IEC 61992 and IEC 60947.

Insulation Characteristics		
Rated Operational Voltage (AC / DC)	[V]	1800 / 900
Max Operational Voltage (AC / DC)	[V]	2000
Rated Insulation Voltage	[V]	2000
Rated Impulse Voltage	[kV]	12
Rated Power Frequency Withstand Voltage (50 Hz for 60 s)		
Between HV to LV Circuit + Earth	[V]	6000
Between Open Contacts	[V]	4700
Between Each Pole (if more than 1)	[V]	-
Between LV Circuit and Earth	[V]	1500
Minimum Clearance Distance between Open Contacts	[mm]	16
Minimum Clearance Distance between Power Circuit to Earth	[mm]	14
Minimum Creepage Distance between Power Circuit to Earth	[mm]	25
Comparative Tracking Index (CTI) (IEC 60112)	[V]	600
Electrical Characteristics		
Conventional Free Air Thermal Current at 40 °C[2]	[A]	920
Conventional Free Air Thermal Current at 75 °C[2]	[A]	800
DC - Rated Operational Current (τ = 15 ms)		
1800 V	[A]	750
900 V	[A]	1540
DC - Maximum Breaking Capacity (τ = 5 ms)		
1800 V	[A]	800
900 V	[A]	1750
AC - Maximum Breaking Capacity (cosφ = 0,8; 50 Hz)		
1800 V	[A]	1150
900 V	[A]	2300
Component Category / Operational Frequency Class		A2 / C3
Rated Short Time Withstand Current	[kA]	12 (for 100 ms)
Critical Current Range	[A]	None
Fault Making Capacity	[kA]	10
Blow Out Circuit Type		Indirect Coil with Arcing Contact

[2] Device cabled according IEC 60947

[3] Other mounting positions not allowed, reduced distances should be approved by Microelettrica

Minimum clearances [mm] from:				
Rated Operational Voltage		X	Y	Z
1800 V	Metal Parts	120	50	50
	Plastic Parts	50	30	20

Minimum clearances [mm] from:				
Rated Operational Voltage		X	Y	Z
900 V	Metal Parts	100	50	30
	Plastic Parts	50	30	20

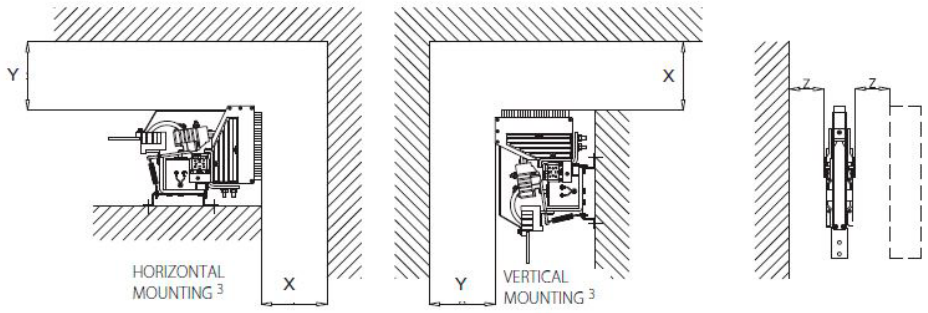

Mechanical Characteristics		
Mechanical Endurance	[cycles]	2×10^6
Shock and Vibrations (IEC 61373)		Cat.1 - Class B
Weight	[kg]	15
Control Circuit		
Control Voltage Range	[V]	0.7Uc ÷ 1.25Uc
Power Consumption (Uc and T = 20 °C) at Pick Up - when Holding	[W]	50 - 50
Mechanical Operation Time (Uc and T = 20 °C) when Closing - Opening	[ms]	210 - 40
Time Constant (L/R) at Pick Up - when Holding	[ms]	170 - 190
Electrical Connections		Fast-on 6.35 x 0.8 mm
Auxiliary Contact		
Rated Operational Voltage (AC / DC)	[V]	250
Conventional Free Air Thermal Current at 40 °C	[A]	10
Tips Material		Silver Alloy (Optional: Golden Plated)
Minimum Let-through Current at 24 - 72 - 110 VDC[4]	[mA]	20(10) - 15(7.5) - 10(5)[4]
Electrical Connections		Fast-on 6.35 x 0.8 mm
Environmental Conditions		
Stock Temperature Range	[°C]	-50 ÷ +85
Operational Temperature Range	[°C]	Tx (-40 ÷ +75)[5]
Pollution Degree - Overvoltage Category (EN 50124-1)		PD3 - OV3
Max Altitude without Performance Derating	[m]	2000

[4] Reference Standard IEC 60947-5-4. Tested in a DRY and CLEAN condition with an LR load. The values with golden plated tips are indicated between brackets. For different working conditions, please contact Microelettrica

[5] According to IEC 50125-1

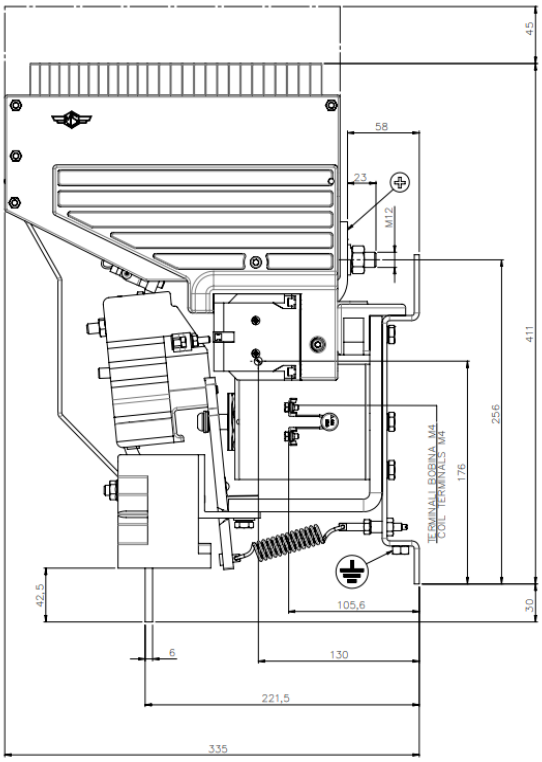

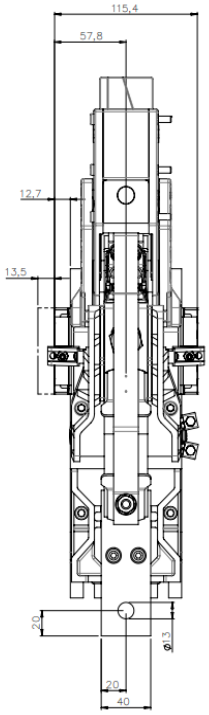

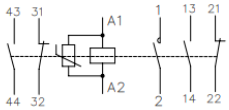

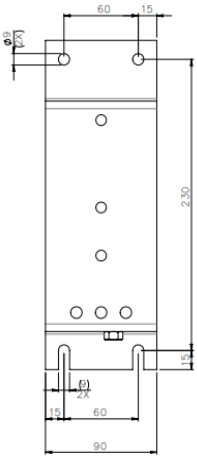

The technical specifications reported are not binding and they should be agreed in the contract.

For further technical information on our products visit www.microelettrica.com

Microelettrica Scientifica S.p.A.

20090 Buccinasco (MI) , Via Lucania 2, Italy
Tel.: +39 02 575731
E-mail: info@microelettrica.com
www.microelettrica.com

KNORR-BREMSE
SELECTRON
NEW YORK AIR BRAKE
KIEPE ELECTRIC
IFE
EVAC
MERAK
ZELISKO
MICROELETTRICA
RAILSERVICES

LTHS08001*A04_rev05_06/2022_AM