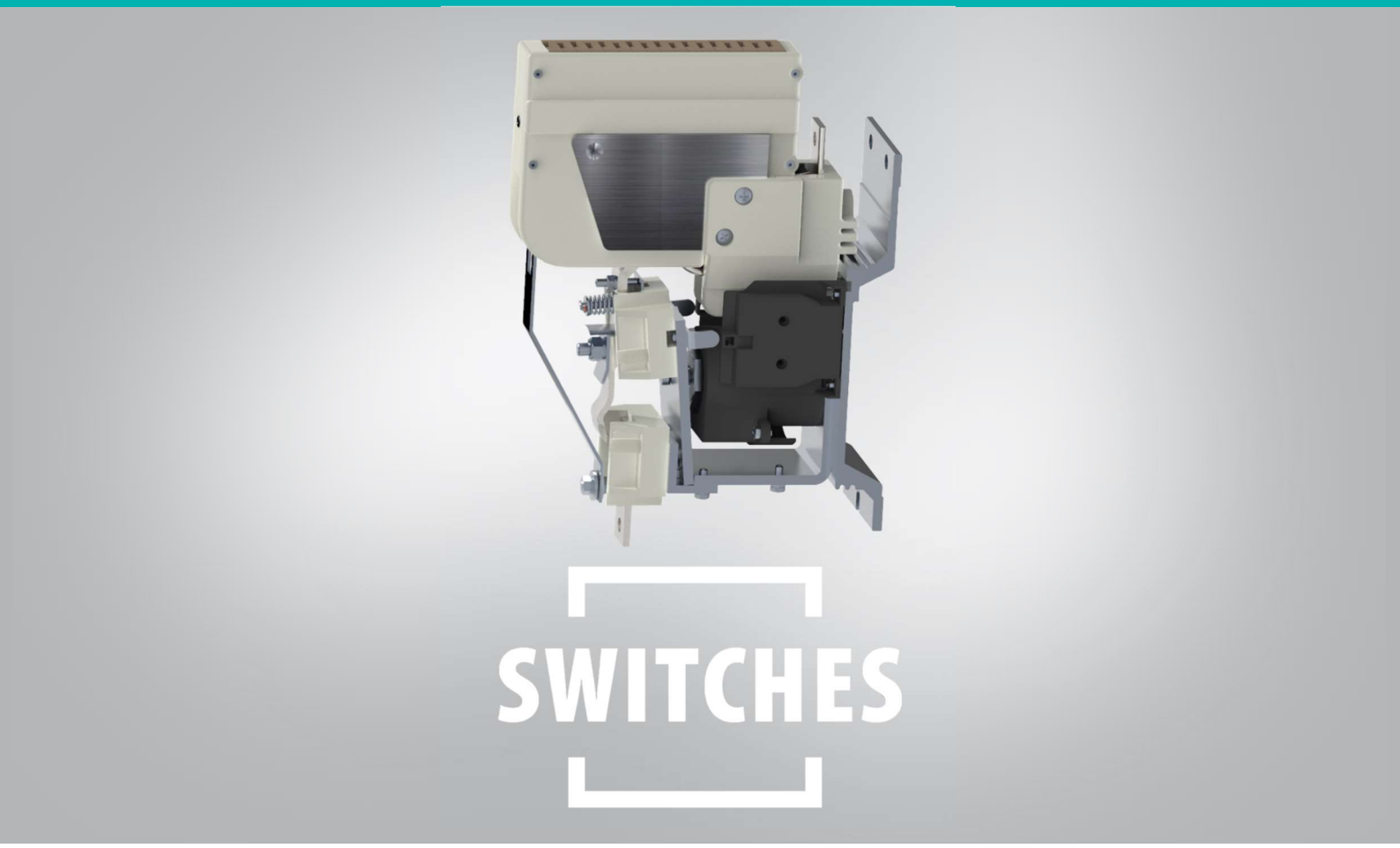


# STANDARD FAMILY CODE
# LTHS03201*A02

| | |
|---|---|
| Family Type | LTHS 320 |
| Number / Type of Poles | 1 / NO |
| Mounting Position | Vertical |
| Control Voltage Rating Uc (DC) [V] | 24 - 36 - 48 - 72 - 110[1] |
| Auxiliary Contact Blocks | 2 x (1 NO + 1 NC) |
| Block Type | SL |
| Arc-chute Material | Ceramic |
| Main Contacts Tips Material | S6 |
| Arcing Contacts Tips Material | S6 |
| Electric Diagram | - |
| Polyester Resin Layout Drawing | D52486 |

MICROELETTRICA

**Description**

Contactor with single interruption in air, electromagnetic control by full power coil. Single state functioning.Reference Standards IEC 60077, IEC 61992 and IEC 60947.

| Insulation Characteristics | | |
|---|---|---|
| Rated Operational Voltage (AC / DC) | [V] | 1800 |
| Max Operational Voltage (AC / DC) | [V] | 2000 |
| Rated Insulation Voltage | [V] | 2000 |
| Rated Impulse Voltage | [kV] | 12 |
| Rated Power Frequency Withstand Voltage (50 Hz for 60 s) | | |
| Between HV to LV Circuit + Earth | [V] | 6000 |
| Between Open Contacts | [V] | 4700 |
| Between Each Pole (if more than 1) | [V] | - |
| Between LV Circuit and Earth | [V] | 1500 |
| Minimum Clearance Distance between Open Contacts | [mm] | 13.5 |
| Minimum Clearance Distance between Power Circuit to Earth | [mm] | 14 |
| Minimum Creepage Distance between Power Circuit to Earth | [mm] | 25 |
| Comparative Tracking Index (CTI) (IEC 60112) | [V] | 600 |
| **Electrical Characteristics** | | |
| Conventional Free Air Thermal Current at 40 °C[2] | [A] | 350 |
| Conventional Free Air Thermal Current at 75 °C[2] | [A] | 320 |
| DC - Rated Operational Current ($\tau$ = 15 ms) | | |
| 1800 V | [A] | 150 |
| 900 V | [A] | 300 |
| DC - Maximum Breaking Capacity ($\tau$ = 5 ms) | | |
| 1800 V | [A] | 275 |
| 900 V | [A] | 750 |
| AC - Maximum Breaking Capacity (cos$\varphi$ = 0,8; 50 Hz) | | |
| 1800 V | [A] | 275 |
| 900 V | [A] | 750 |
| Component Category / Operational Frequency Class | | A2 / C3 |
| Rated Short Time Withstand Current | [kA] | 5 (for 100 ms) |
| Critical Current Range | [A] | None at 900 Vdc<br>< 5A at 1800 Vdc |
| Fault Making Capacity | [kA] | 5 |
| Blow Out Circuit Type | | Indirect coil with arcing contact |
| **Mechanical Characteristics** | | |
| Mechanical Endurance | [cycles] | $2 \times 10^6$ |
| Shock and Vibrations (IEC 61373) | | Cat.1 - Class B |
| Weight | [kg] | 4.8 |
| **Control Circuit** | | |
| Control Voltage Range | [V] | 0.7Uc ÷ 1.25Uc |
| Power Consumption (Uc and T = 20 °C) at Pick Up - when Holding | [W] | 25 – 25 |
| Mechanical Operation Time (Uc and T = 20 °C) when Closing - Opening | [ms] | 110 - 30 |
| Time Constant (L/R) at Pick Up - when Holding | [ms] | 60 - 80 |
| Electrical Connections | | Fast-on 6.35 x 0.8 mm |

| Auxiliary Contact | | |
|---|---|---|
| Rated Operational Voltage (AC / DC) | [V] | 250 |
| Conventional Free Air Thermal Current at 40 °C | [A] | 10 |
| Tips Material | | Silver Alloy<br>(Optional: Golden Plated) |
| Minimum Let-through Current at 24 - 72 - 110 VDC[4] | [mA] | 20(10) - 15(7.5) - 10(5)[4] |
| Electrical Connections | | Fast-on 6.35 x 0.8 mm |
| **Environmental Conditions** | | |
| Stock Temperature Range | [°C] | -50 ÷ +85 |
| Operational Temperature Range | [°C] | Tx (-40 ÷ +75)[5] |
| Pollution Degree - Overvoltage Category (EN 50124-1) | | PD3 - OV3 |
| Max Altitude without Performance Derating | [m] | 2000 |

[1] To be specified in order phase.
[2] Device cabled according IEC 60947
[3] Other mounting positions not allowed, reduced distances should be approved by Microelettrica
[4] Reference Standard IEC 60947-5-4. Tested in a DRY and CLEAN condition with an LR load. The values with golden plated tips are indicated between brackets. For different working conditions, please contact Microelettrica
[5] According to EN 50125-1

| Minimum clearances [mm] from: | | | | |
|---|---|---|---|---|
| Rated Operational Voltage | | X | Y | Z |
| 1800 V | Metal Parts | 120 | 50 | 50 |
| | Plastic Parts | 50 | 30 | 20 |

| Minimum clearances [mm] from: | | | | |
|---|---|---|---|---|
| Rated Operational Voltage | | X | Y | Z |
| 900 V | Metal Parts | 100 | 50 | 30 |
| | Plastic Parts | 50 | 30 | 20 |

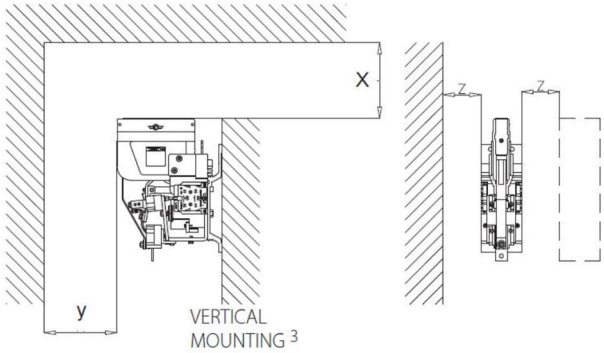


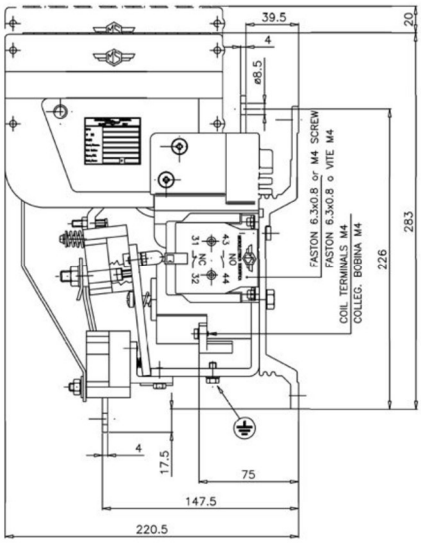


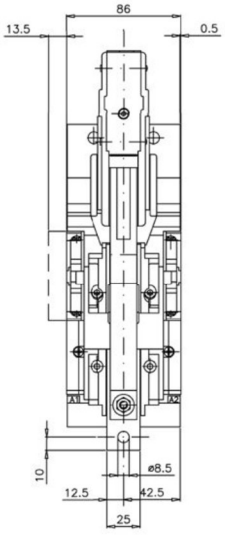


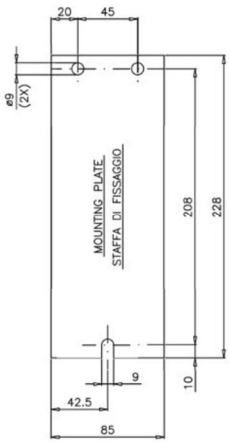


The technical specifications reported are not binding and they should be agreed in the contract.

**For further technical information on our products visit www.microelettrica.com**


**Microelettrica Scientifica S.p.A.**
20090 Buccinasco (MI) , Via Lucania 2, Italy
Tel.: +39 02 575731
E-mail: info@microelettrica.com
www.microelettrica.com


KNORR-BREMSE
SELECTRON
NEW YORK AIR BRAKE
KIEPE ELECTRIC
IFE
EVAC
MERAK
ZELISKO
MICROELETTRICA
RAILSERVICES




LTHS03201*A02_rev11_07/2022_AB