BREAKERS

STANDARD FAMILY CODE
IR 4000 SERIES VV

Mounting Position	Vertical
Control Voltage Rating Uc [Vdc]	24 - 36 - 48 - 72 - 110 [1]
Auxiliary Contact Blocks	5a1 + 6b0
Block Type	Reed
Arc chute Material	Ceramic
Main Contacts tips Material	$AgSnO_2$
Arcing Contacts tips Material	AgW
Electric Diagram HC	42870649C
Layout Drawing HC for 18M	42870756C
Layout Drawing HC for 36M	42870757C

Commercial Code			
Voltage	Holding System	Thermal Current	
		3000 A	4500 A
1800 V	Holding Coil	**IR 4030 VV 18M**	**IR 4045 VV 18M**
3600 V		**IR 4030 VV 36M**	**IR 4045 VV 36M**

MICROELETTRICA

Description

DC single pole, magnetic blowout, trip free, air circuit breaker. The closing mechanism is motor-operated independent type while the holding mechanism is magnetic type, provided with holding coil. The breaker is equipped with a direct acting over-current trip device, which may be either unidirectional or bi-directional. Reference standard IEC 60077-3.

Insulation Characteristics	18M	36M
Rated Operational Voltage U_{Ne} [V_{dc}] [1]	1800	3600
Max Operational Voltage [V_{dc}]	2000	4000
Rated Insulation Voltage [V_{dc}]@ OV4 /PD3A	3700	3700
Rated Insulation Voltage [V_{dc}]@ OV3 /PD3	4800	4800
Electrical Characteristics	**18M**	**36M**
Conventional Free Air Thermal Current [A] at 40°C [2]	3000 / 4500 [1]	
Rated Short Cicuit Making and Breaking Capacity / Time constant [kA/ms]		
τ 1	100 / 0 (peak 140 kA)	55 / 0 (peak 77 kA)
τ 2	60 / 15	50 / 15
τ 3	50 / 40	50 / 30
τ 4	35 / 100	50 / 50
Rated Duty Cycle	0-20s-CO-60s-CO	
Peak arc voltage [$\hat{U}_{arc}$]	up to 3 x U_{Nm}	
Standard direct acting trip device [kA] [3]		
Setting Range A1	0.9 ÷ 1.5	
Setting Range A2	1.4 ÷ 2.7	
Setting Range A3	2 ÷ 3.4	
Setting Range A4	2.8 ÷ 4.7	
Blow Out Circuit Type	Coil	
Mechanical Characteristics		
Mechanical Endurance (cycles)	6x50000	
Electrical durability [In @ Un]	4x200	
Shock and Vibrations (IEC61373)	Cat.1 - Class B	
Maximum weight [kg] for 18M / 36M	165 / 185	
Control Circuit		
Control Voltage Range	0.7Uc ÷ 1.25Uc	
Operated by	D.C. Motor	
Holding closed by	Holding Coil	
Peak closing power and time [W x s]	500 x 0.01	
Nominal closing power and time [W x s]	360 x 1.5	
Holding Coil version		
Nominal holding power @ 20°C [W]	50	
Nominal opening power @ 20°C [W]	0	
Controlled opening time: De-energize Holding coil [ms]	< 50	
Controlled opening time : FOD (optional) [ms] [4]	4 ÷ 6	

Auxiliary Circuit	
Type	Reed Contacts (Vacuum Technology)
Voltage [V_{dc}]	24 / 36 / 48 / 72 / 110[1]
Rated Current [A]	5
Maximum Breaking Power with Inductive Load τ=2ms [W]	120
Maximum Breaking Current with Inductive Load τ=2ms [A]	3
Maximum Breaking Voltage with Inductive Load τ=2ms [V]	250
Minimum let-through Current at 24Vdc [mA]	5
Electrical Connections	Fast-on 6.3 x 0.8mm or customized LV Connection[1]

Environmental Conditions	
Stock Temperature Range	-50°C ÷ +85°C
Operational Temperature Range	-30°C ÷ +70°C
Clearance in air [mm]	40
Creepage distance [mm]	80
Comparative Tracking Index (CTI)	>600
Max Altitude without Performance Derating [m]	2000
Humidity [5]	10 ÷ 95% RH

[1] To be specified in order phase
[2] Device cabled according IEC 60947
[3] Tripping point reached up with di/dt=200A/s. Other setting range are available on request
[4] For optional fast opening device (FOD) information please contact Microelettrica Sales Department
[5] According to IEC62498-1
[6] Reduced distances should be approved by Microelettrica
[7] These quotes are referred to a 50% surface opening grid

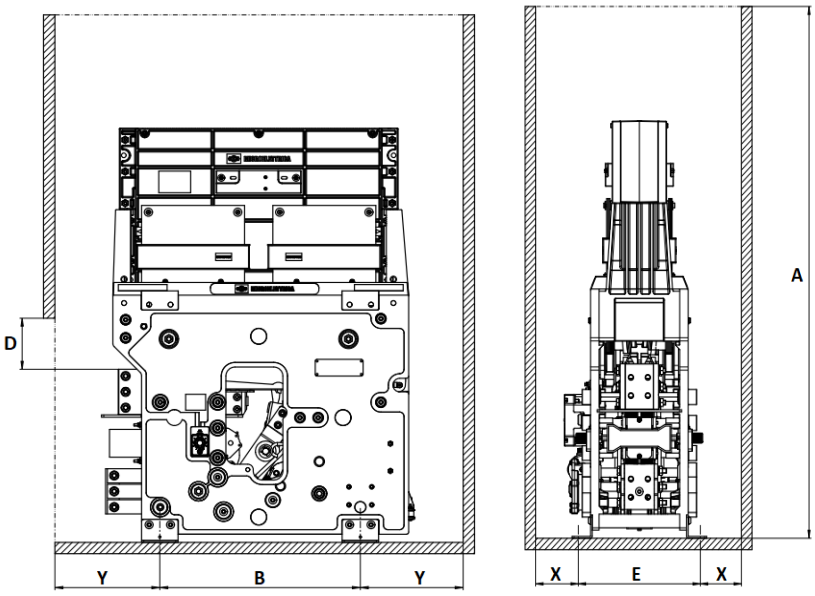

The Drawing is related to 36M

Minimum clearances [mm] from [6]:							
Rated Operational		A[7]	B	D	E	X	Y
1800	Metal Parts	1200	440	100	289	115	175
	Plastic Parts	1100	440	100	289	65	125
3600	Metal Parts	1200	440	100	289	150	250
	Plastic Parts	1100	440	100	289	100	250

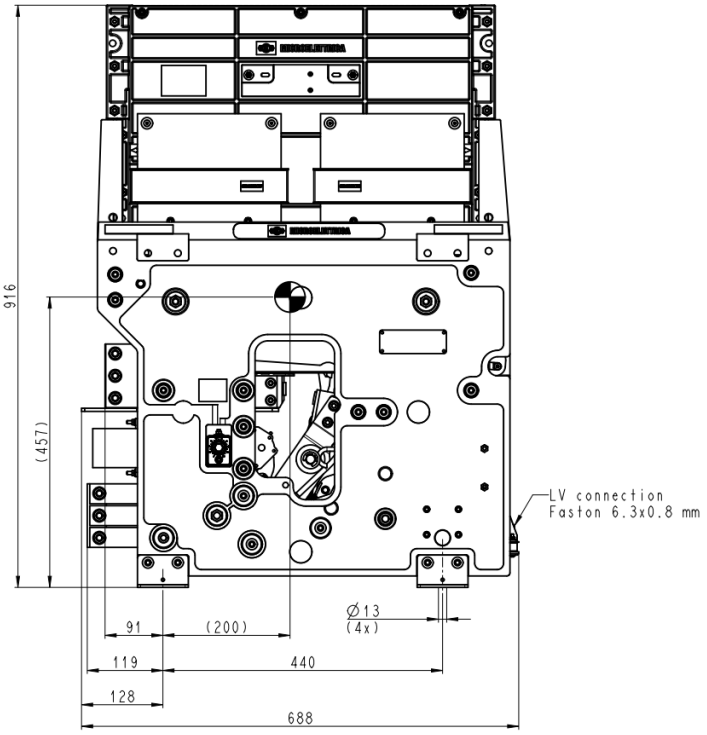

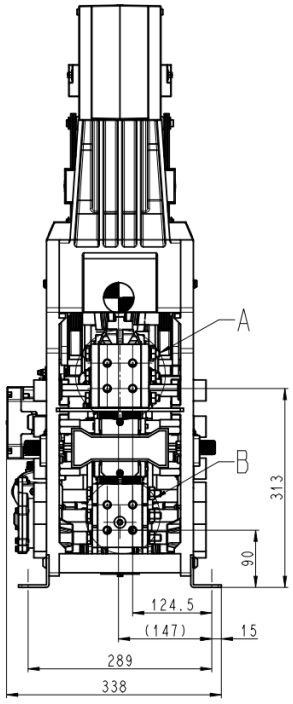

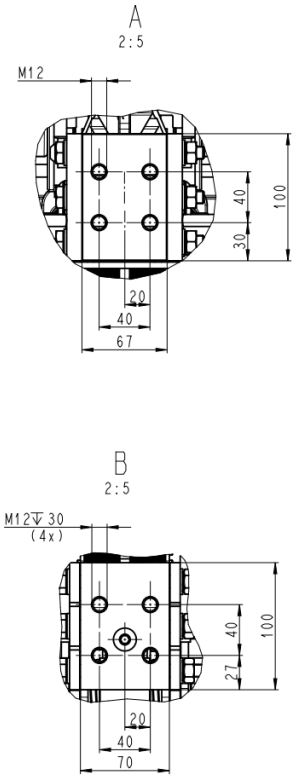

The maximum dimension are valid for both version.

The technical specifications reported are not binding and they should be agreed in the contract.

For further technical information on our products visit www.microelettrica.com

Microelettrica Scientifica S.p.A.

20090 Buccinasco (MI) , Via Lucania 2, Italy
Tel.: +39 02 575731
E-mail: info@microelettrica.com
www.microelettrica.com

KNORR-BREMSE
SELECTRON
NEW YORK AIR BRAKE
EVAC
IFE
ZELISKO
MERAK
RAILSERVICES
MICROELETTRICA

IR4000_series_VV_R18_05/2024_SO