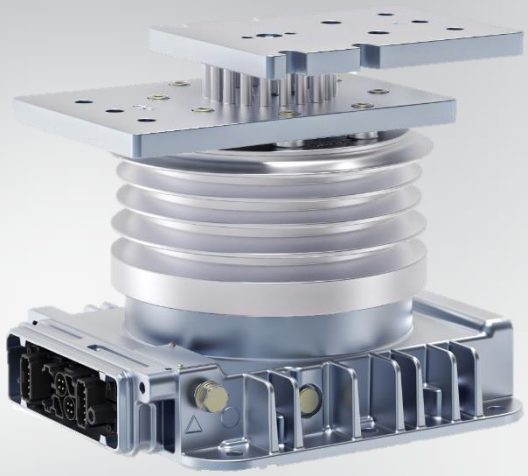

METERING

ECOMeter DC

Energy meter for railways application

ECOMeter DC is a sensor able to measure DC line current and voltage and calculate the consumed and regenerated active or reactive energy of a traction unit.

The ECOMeter DC can be used on railway vehicles which operate in DC 3 kV, DC 1.5 kV and DC 750V voltage systems according to EN50163. The line voltage and the line current are measured, and the energy value is calculated in compliance with EN 50463-2.

The device features very high accuracy voltage measurement and high galvanic insulation degree between Low and High Voltage side. The device is characterized by very low energy absorption.

MICROELETTRICA

Characteristics

Voltage and Current Measurement	3 kVdc	1.5 kVdc	0.750 kVdc	Reference
Nominal Voltage [kV]	3	1,5	0.750	EN 50163
Min. Voltage – Max. Voltage [kV]	2 – 3.9	1 – 1.95	0. 5 – 1	
Full Scale Range [kV]	5	5	1.5	
Max Amplitude of Harmonics [kV]	-	-	-	EN 50388
Max. Current without ventilation [A]	3000	3000	3000	
Max. Current with 3 m/s ventilation [A]	4000	4000	4000	
Max. Short circuit current of supply system [kA]	50	100	-	EN 50388
Accuracy	0,5R			EN 50463

Mechanical Characteristics	Value	Reference
Weight	20,000 kg ± 10%	
Fire and smoke class	HL3	EN45545-2
Protection class	IP 67	EN60529
Electrical Characteristics		**Reference**
Over Voltage Degree	OV4	EN 50124-1
Pollution degree	PD4	
Insulation Voltage Test	15 kV 50 Hz -60 s	
Rated Pulse Voltage UNI	±30 kV	
Creepage	90 mm	
Clearance	54 mm	
Material Group	I (CTI≥600)	
Auxiliary Power Supply	**Value**	**Reference**
Nominal supply voltage	24÷110 Vdc	
Power consumption	< 12 W	
Rated current (@ 24V and @ 25°C)	0,5 A	
Inrush current (@ 24V and @ 25°C)	5,9 A peak (over rated current for 20 ms)	
Environmental Conditions	**Value**	**Reference**
Shocks and vibrations	Cat. 1 – Class B	EN 61373
Ambient temperature	OT4 Range	EN 50155 EN 50125-1
Temperature yearly average	45°C	
Temperature variation	±3°C/s	
Average yearly relative humidity	h<75%	EN 50125-1
Continuous relative humidity	30 days 75% < h < 95%	
Absolute maximum humidity	30 g/m3	
Maximum Operating Wind Speed	30 m/s	EN 50125-1
Absolute Maximum Wind Speed (No damages may occur)	50 m/s	
Maximum rain rate	6 mm/min	EN 50125-1
Snow - Maximum hailstones diameter	15 mm	EN 50125-1
Maximum solar radiation level	1120 W/m^2	EN 50125-1
Maximum solar radiation exposure time	8h	
Maximum altitude	AX	EN 50125-1

Inputs/Output

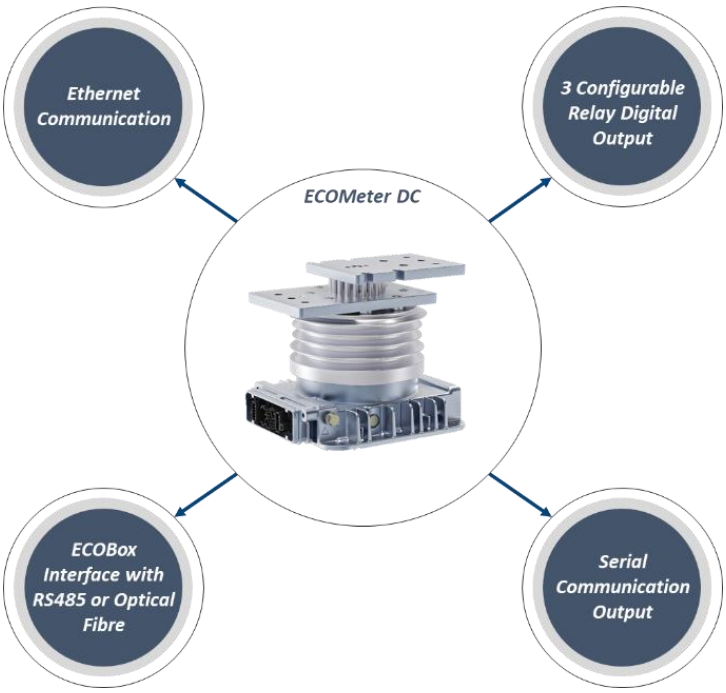

Ethernet Communication

One Ethernet communication port is available and dedicated to the data transfer to the DHS. Ethernet communication can be used also to transmit data to the train communication network and for diagnostic purpose. Mechanisms of protection and security can be applied to ensure both the integrity and the management of data transmitted over the line. Data exchange with TCMS is foreseen according to protocol specification to be defined.

Optical Fibre - High Speed Serial Communication

One optical fibre and one serial "digital sensor" at RS485 communication level are available to interface the ECOBox with the ECOMeter. Optical fibre and digital sensor can be used both together or independently. The maximum cable length allowed in case of RS485 communication is 4m.

Relay Digital Output

The ECOMeter DC provides three relays output to let available the device status and the detected catenary types. The three relays could be both NO (normally open) or NC (normally closed).

Specific Application Requirements

Catenary Detection

ECOMeter DC can detect the catenary at which is connected and provide feedback through the digital outputs and eventually also by Ethernet communication through TRDP protocol.

Overcurrent Detection

The overcurrent can be detected by the ECOMeter DC with the following options:

- DC Fast Overcurrent Detection – Useful to detect short-circuit
- DC Slow Overcurrent Detection – Useful to protect the system against overloads

Harmonic Detection

Harmonic detection function is one of the main features of the ECOMeter DC, different software filter can be implemented with order up to 8th to detect the harmonics according to the specific national standards.

Dimension ECOMeter DC

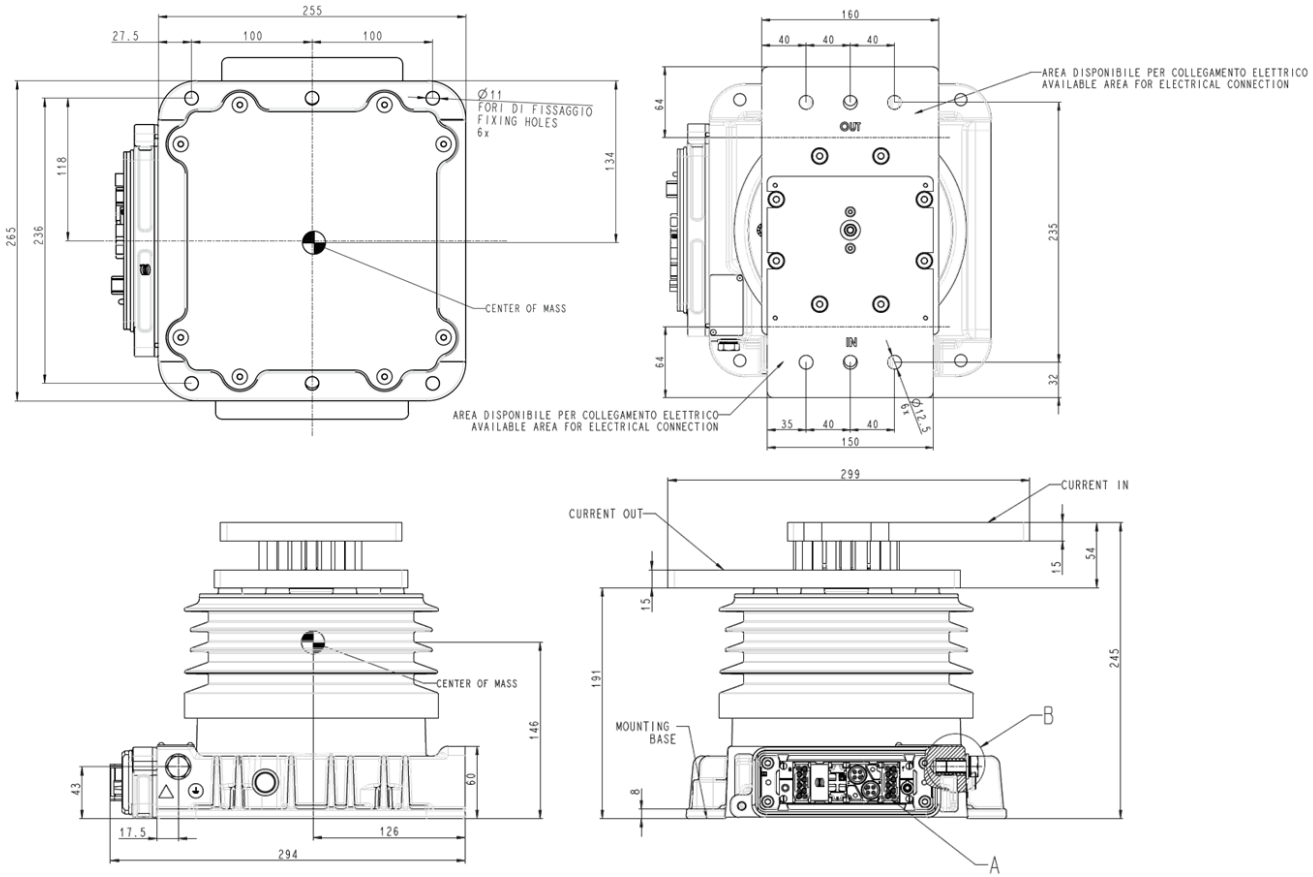

For further technical information on our products visit www.microelettrica.com

Microelettrica Scientifica S.p.A.
20090 Buccinasco (MI) , Via Lucania 2,
Italy Tel.: +39 02 575731
E-mail: info@microelettrica.com
www.microelettrica.com

KNORR-BREMSE
SELECTRON
NEW YORK AIR BRAKE
KIEPE ELECTRIC
IFE
EVAC
MERAK
ZELISKO
MICROELETTRICA
RAILSERVICES